43xx 2-6-0 TENDER LOCO

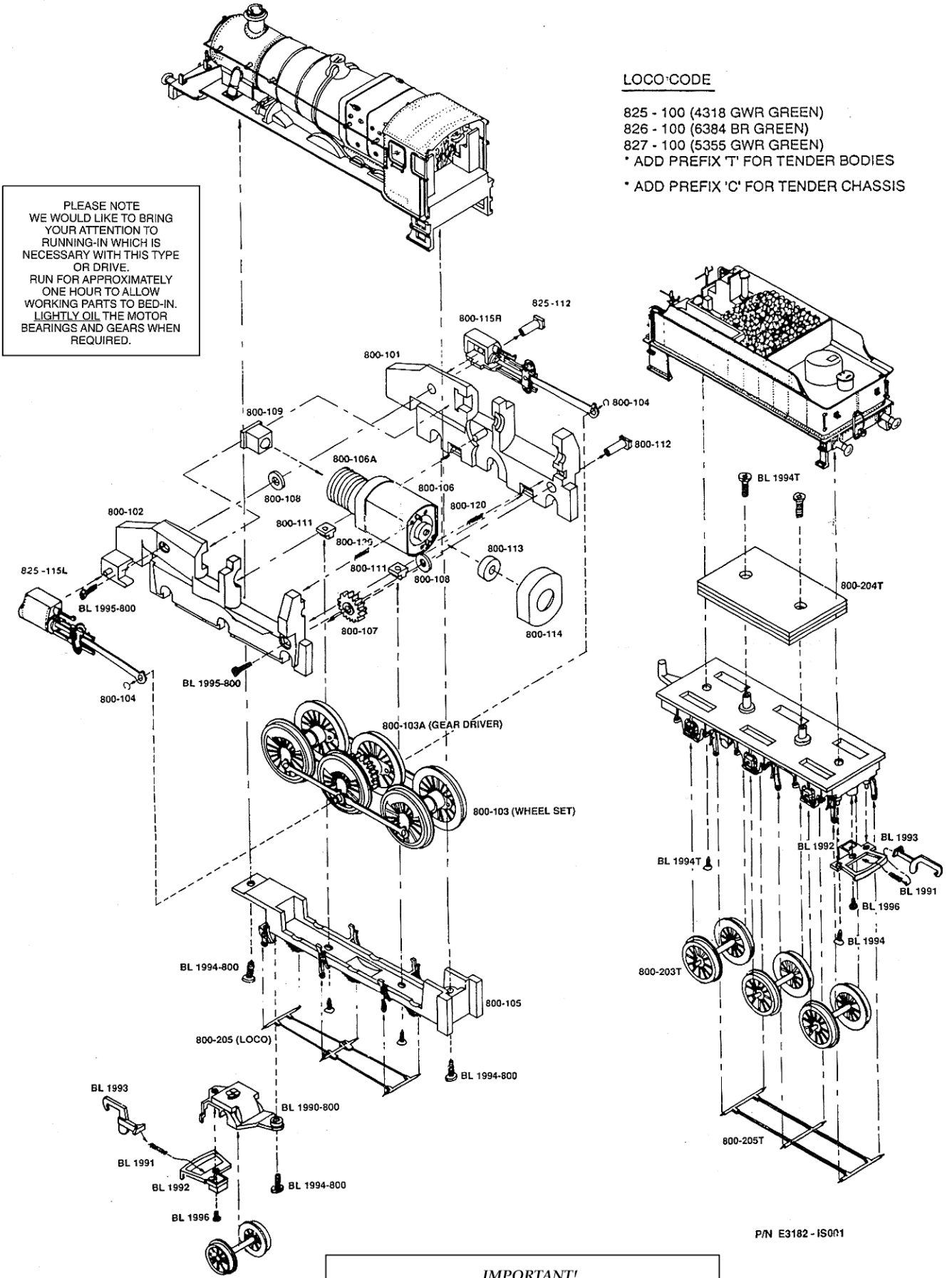

IMPORTANT!

When ordering amy replacement parts, please ensure to quote the appropriate catalogue number/Livery of your Bachmann Locomotive in addition to the part number required.

Please quote the runnuing number as well if required